TSM100

SINGLE OPERATIONAL AMPLIFIER AND SINGLE COMPARATOR

NOT FOR NEW DESIGN

OPERATIONAL AMPLIFIER

- LOW INPUT OFFSET VOLTAGE : 0.5mV typ.
- MEDIUM BANDWIDTH (unity gain) : 0.9MHz
- LARGE OUTPUT VOLTAGE SWING : 0V to (V_{CC} - 1.5V)
- INPUT COMMON MODE VOLTAGE RANGE INCLUDES GROUND
- WIDE POWER SUPPLY RANGE : 5 to 30V ±2.5 TO ±15V
- ESD PROTECTION : 2kV

COMPARATOR (OPEN COLLECTOR)

- INPUT COMMON MODE VOLTAGE RANGE INCLUDES GROUND
- LOW OUTPUT SATURATION VOLTAGE : 250mV @ I_o = 4mA

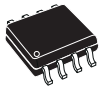

D
SO8
(Plastic Micropackage)

DESCRIPTION

The TSM100 is a monolithic IC that includes one independent op-amp and one independent comparator. This device is offering space and cost saving in many applications like power supply management or data acquisition systems.

ORDER CODE

Part Number	Temperature Range	Package
		D
TSM100I	-40°C, +105°C	•

D = Small Outline Package (SO) - also available in Tape & Reel (DT)

PIN CONNECTIONS (top view)

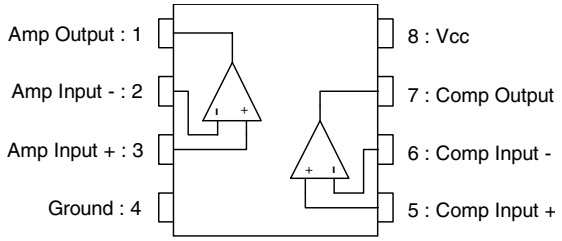

NOT FOR NEW DESIGN
Obsolete Product(s) - Obsolete Product(s)

ABSOLUTE MAXIMUM RATINGS

Symbol	Parameter	Value	Unit
V_{CC}	Supply Voltage	32	V
V_{id}	Differential Input Voltage	32	V
V_i	Input Voltage	-03. to +32	V
T_{oper}	Operating Free-air Temperature Range	-40 to +105	°C
T_j	Maximum Junction Temperature	150	°C
T_l	Maximum Lead Temperature (10 seconds maximum)	260	°C
R_{thja}	Thermal Resistance Junction to Ambient	175	°C/W

ELECTRICAL CHARACTERISTICS

Symbol	Parameter	Min.	Typ.	Max.	Unit
I_{CC}	Total Supply Current Vcc+ = 5V, no load Vcc+ = 30V, no load		 0.9	 1.4 1.8	mA

NOT FOR NEW DESIGN
Obsolete Product(s) - Obsolete Product(s)

OPERATIONAL AMPLIFIER

V_{CC}^+ = +5V, V_{CC} = Ground, V_o = 1.4V,T_{amb} = 25°C (unless otherwise specified)

Symbol	Parameter	Min.	Typ.	Max.	Unit
V_{io}	Input Offset Voltage T_{amb} = 25°C $T_{min.} \le T_{amb} \le T_{max.}$		 0.5	 3 4	mV
DV_{io}	Input Offset Voltage Drift		7		µV/°C
I_{io}	Input Offset Current		2	30	nA
I_{ib}	Input Bias Current		20	150	nA
Avd	Large Signal Voltage Gain V_{CC} = 15V, R_L = 2k, Vo = 1.4V to 11.4V	 50	 100		V/mV
SVR	Supply Voltage Rejection Ratio V_{CC} = 5V to 30V	 65	 100		dB
Vicm	Input Common Mode Voltage Range V_{CC} = +30V - see note 1)	 0		 (V_{CC}+) -1.5	V
CMR	Common Mode Rejection Ratio	65	85		dB
I_{source}	Output Current Source V_{CC} = +15V, Vo = 2V, V_{id} = +1V	 20	 40		mA
I_o	Short Circuit to Ground V_{CC} = +15V		 40	 60	mA
I_{sink}	Output Current Sink V_{id} = -1V, V_{CC} = +15V, V_o = 2V V_{CC} = +15V, V_o = 0.2V	 10 12	 20 50		 mA µA
V_{OH}	High Level Output Voltage V_{CC}^+ = 30V T_{amb} = 25°C, R_L = 2k T_{amb} = 25°C, R_L = 10k	 26 27	 27 28		V
V_{OL}	Low Level Output Voltage R_L = 10k		 5	 15	mV
SR	Slew Rate at Unity Gain V_i = 0.5 to 3V, V_{CC} = 15V R_L = 2k, C_L = 100pF, unity gain	 0.2	 0.4		V/µs
GBP	Gain Bandwidth Product V_{CC} = 30V,R_L = 2k, C_L = 100pF f = 100kHz, V_{in} = 10mV	 0.5	 0.9		MHz
THD	Total Harmonic Distortion f = 1kHz A_V = 20dB,R_L = 2k, V_{CC} = 30V C_L = 100pF, V_o = $2V_{pp}$		 0.015		%
e_n	Equivalent Input Noise Voltage f = 1kHz, Rs = 100Ω Vcc = 30V		 40		nV/√Hz

1. The input common-mode voltage of either input signal voltage should not be allowed to go negative by more than 0.3V. The upper end of the common-mode voltage range is V_{CC}^+ - 1.5V.
But both inputs can go to Vcc+ +0.3V without damage.

NOT FOR NEW DESIGN
Obsolete Product(s) - Obsolete Product(s)

COMPARATOR

V_{CC}^{+} = +5V, V_{CC} = Ground,T_{amb} = 25°C (unless otherwise specified)

Symbol	Parameter	Min.	Typ.	Max.	Unit
V_{io}	Input Offset Voltage T_{amb} = 25°C		1	5	mV
I_{io}	Input Offset Current		5	50	nA
I_{ib}	Input Bias Current		25	250	nA
Avd	Large Signal Voltage Gain V_{CC} = 15V, R_L = 15k, Vo = 1V to 11V		200		V/mV
Vicm	Input Common Mode Voltage Range [1]	0		(V_{CC}+) -1.5	V
I_{sink}	Output Sink Current V_{id} = -1V, V_o = 1.5V	6	16		mA
V_{OL}	Low Level Output Voltage V_{id} = -1V, I_{sink} = 4mA		250	400	mV
I_{OH}	High Level Output Current V_{id} = 1V, V_{cc} = V_o = 30V		0.1		nA
t_{re}	Response Time R_L = 5.1k to V_{CC}+ [2]		1.3		µs
t_{rel}	Large Signal Response Time V_i = TTL, V_{ref} = +1.4V, R_L = 5.1k to V_{CC}+		300		ns

1. The input common-mode voltage of either input signal voltage should not be allowed to go negative by more than 0.3V. The upper end of the common-mode voltage range is V_{CC}^{+} - 1.5V.
But either of both inputs can go to 36V without damage.
2. The response time is specified for a 100mV input step with 5mV overdrive. For larger overdrive signals, 300ns can be obtained

NOT FOR NEW DESIGN
Obsolete Product(s) - Obsolete Product(s)

PACKAGE MECHANICAL DATA
8 PINS - PLASTIC MICROPACKAGE (SO)

SO-8 MECHANICAL DATA

DIM.	mm.			inch		
	MIN.	TYP	MAX.	MIN.	TYP.	MAX.
A	1.35		1.75	0.053		0.069
A1	0.10		0.25	0.04		0.010
A2	1.10		1.65	0.043		0.065
B	0.33		0.51	0.013		0.020
C	0.19		0.25	0.007		0.010
D	4.80		5.00	0.189		0.197
E	3.80		4.00	0.150		0.157
e		1.27			0.050	
H	5.80		6.20	0.228		0.244
h	0.25		0.50	0.010		0.020
L	0.40		1.27	0.016		0.050
k	8° (max.)					
ddd			0.1			0.04

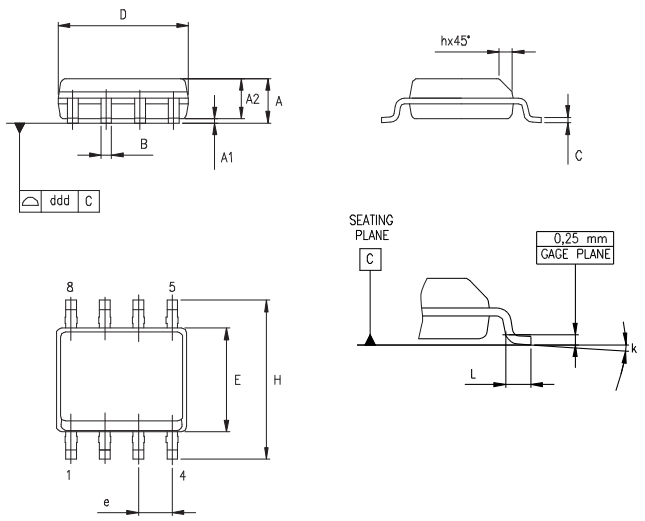

0016023/C

Information furnished is believed to be accurate and reliable. However, STMicroelectronics assumes no responsibility for the consequences of use of such information nor for any infringement of patents or other rights of third parties which may result from its use. No license is granted by implication or otherwise under any patent or patent rights of STMicroelectronics. Specifications mentioned in this publication are subject to change without notice. This publication supersedes and replaces all information previously supplied. STMicroelectronics products are not authorized for use as critical components in life support devices or systems without express written approval of STMicroelectronics.

The ST logo is a registered trademark of STMicroelectronics
All other names are the property of their respective owners

© 2005 STMicroelectronics - All rights reserved

STMicroelectronics group of companies
Australia - Belgium - Brazil - Canada - China - Czech Republic - Finland - France - Germany - Hong Kong - India - Israel - Italy - Japan - Malaysia - Malta - Morocco - Singapore - Spain - Sweden - Switzerland - United Kingdom - United States of America
www.st.com